MASALTA®

PARTS MANUAL
PLATE COMPACTOR MS100

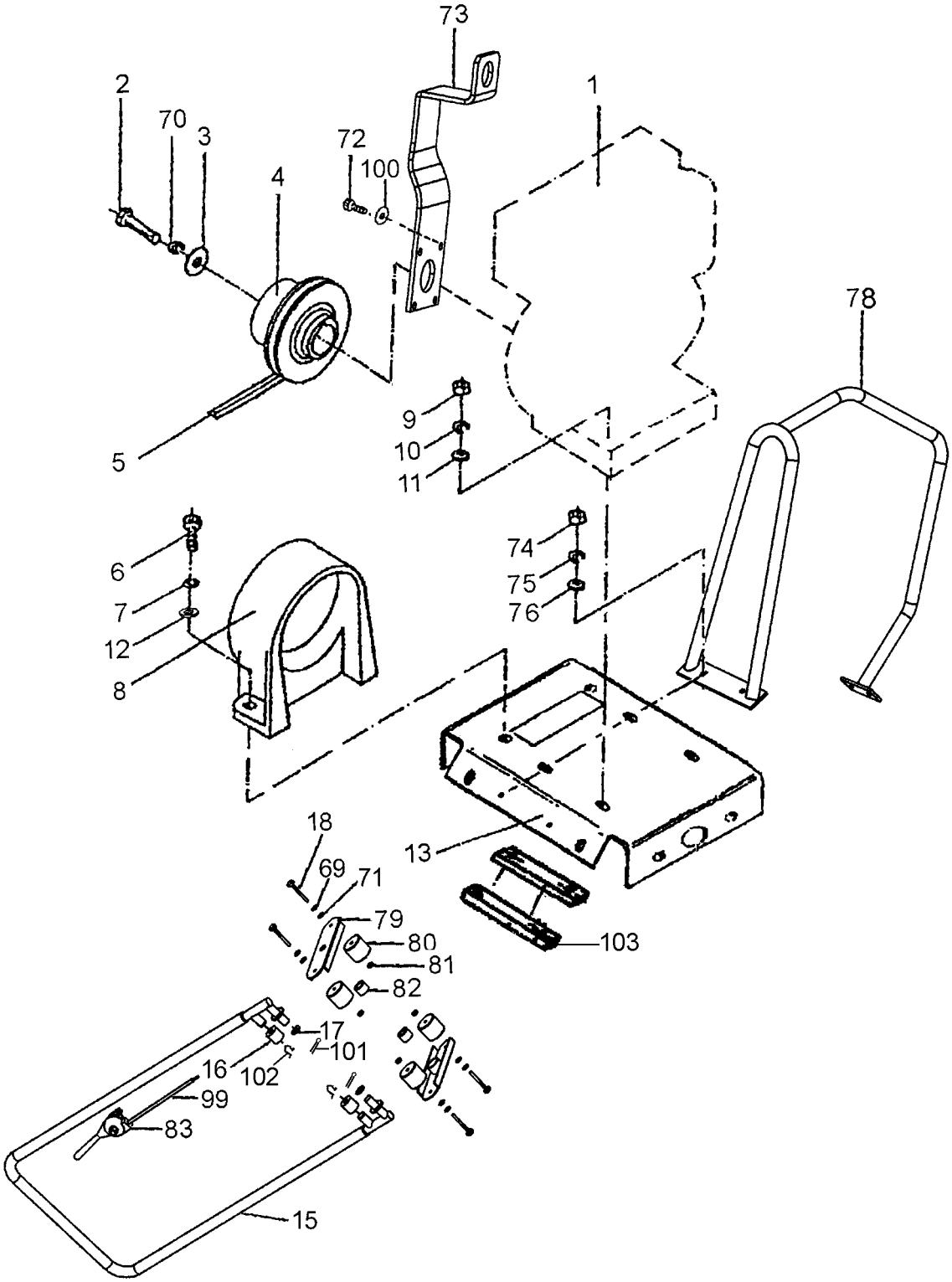

MS100 PARTS LIST 1

MS100 PARTS LIST 1

ITEM NO.	PART NO.	DESCRIPTION	QTY
1	0020001-1	DIESEL ENGINE	1
	0020001-2	HONDA ENGINE	1
	0020001-3	ROBIN ENGINE	1
2	0070000	BOLT-GB70	1
3	0097000	WASHER-GB97.1	1
4	2006000-1	CLUTCH CPL FOR DIESEL ENGINE	1
	2006000-2	CLUTCH CPL FOR HONDA ENGINE	1
	2006000-3	CLUTCH CPL FOR ROBINE ENGINE	1
5	0013575-1	V-BELT FOR DIESEL ENGINE	1
	0013575-2	V-BELT FOR PETROL ENGINE	1
6	0070006	CAP SCREW M6 X 20-GB70	2
7	0093006	SPRING WASHER6-GB93	2
8	2003000	V-BELT GUARD	1
9	0061708	NUT M8-GB6170	4
10	0093008	SPRING WASHER8-GB93	4
11	0097008	WASHER8-GB97.1	4
12	0097006	WASHER6-GB97.1	2
13	2002000	ENGINE MOUNTING PLATE	1
15	2004000	HANDLE ASSY	1
16	2005000	VIBRATION MOUNT	2
17	0089412	RETAINING RING 12-GB894.1	2
18	0057810	BOLT M10X50-GB5785	4
69	0093010	SPRING WASHER 10-GB93	4
70	0093008	SPRING WASHER 8 - GB93	1
71	0097010	WASHER 10-GB97	4
72	0061708	NUT M8 - GB6170 (OPTIONAL)	4
73	2006001	LIFTING HOOK (OPTIONAL)	1
74	0061708	NUT M8 - GB6170 (OPTIONAL)	4
75	0093008	SPRING WASHER 8 - GB93 (OPTIONAL)	4
76	0097008	WASHER 8 -GB97.1 (OPTIONAL)	4
78	2009000	FRAME ASSEMBLY (OPTIONAL)	1
79	2005001	PLATE	2
80	2005002	VIBRATION DAMPER	4
81	0061710	NUT M10-GB6170	4
82	2005003	VIBRATION DAMPER	2
83	A2004001-1	THROTTLE CONTROL LEVER (OPTIONAL)	1
99	156006-1	THROTTLE CONTROL WIRE (OPTIONAL)	1
100	0093008	SPRING WASHER 8 - GB93 (OPTIONAL)	4
101	2004001	SPLIT PIN	2
102	2004002	RETAINING RING	2
103	2005004	BRACKET	2

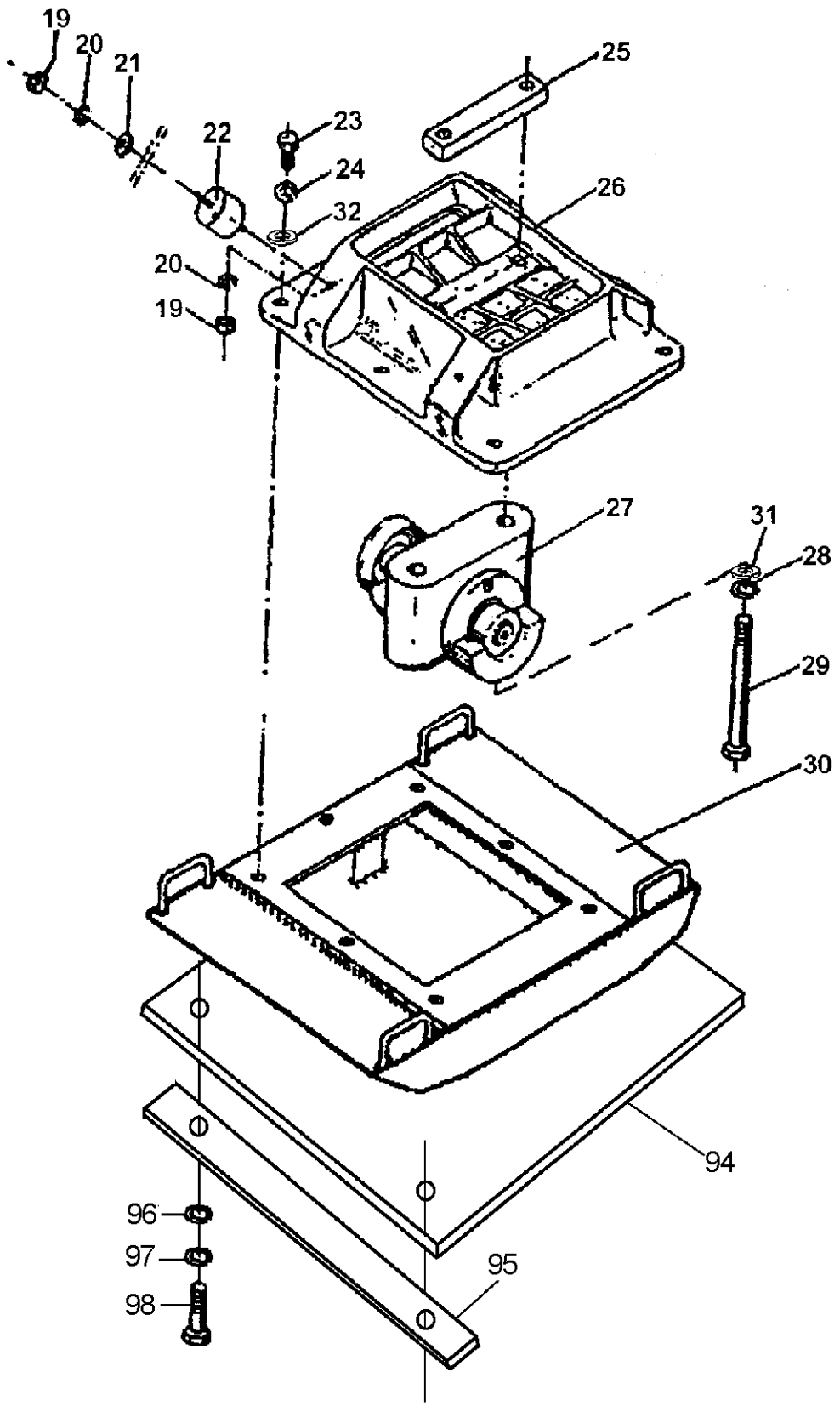

MS100 PARTS LIST 2

MS100 PARTS LIST 2

ITEM NO.	PART NO.	DESCRIPTION	QTY
19	0061710	NUT M10-GB6170	8
20	0093010	SPRING WASHER10-GB93	8
21	0097010	WASHER10-GB97.1	4
22	2002001	VIBRATION DAMPER	4
23	0057812	BOLT M12 X 40-GB5782	8
24	0093012	SPRING WASHER12-GB93	8
25	2007007	MOUNTING BAR	1
26	2007006	ALUMINIUM BASE	1
27	2007000	EXCITER CPL	1
28	0093016	SPRING WASHER16-GB93	2
29	0057816	BOLT M16 X 155-GB5782	2
30	2001000	BASE PLATE	1
31	0097016	WASHER16-GB97.1	2
32	0097012	WASHER12-GB97.1	8
94	2001001	RUBBER MAT (OPTIONAL)	1
95	2001002	FIX STRIP (OPTIONAL)	1
96	0097017	WASHER 10-GB97 (OPTIONAL)	2
97	0093010	SPRING WASHER 10-GB93 (OPTIONAL)	2
98	0057810	BOLT M10X40-GB5783 (OPTIONAL)	2

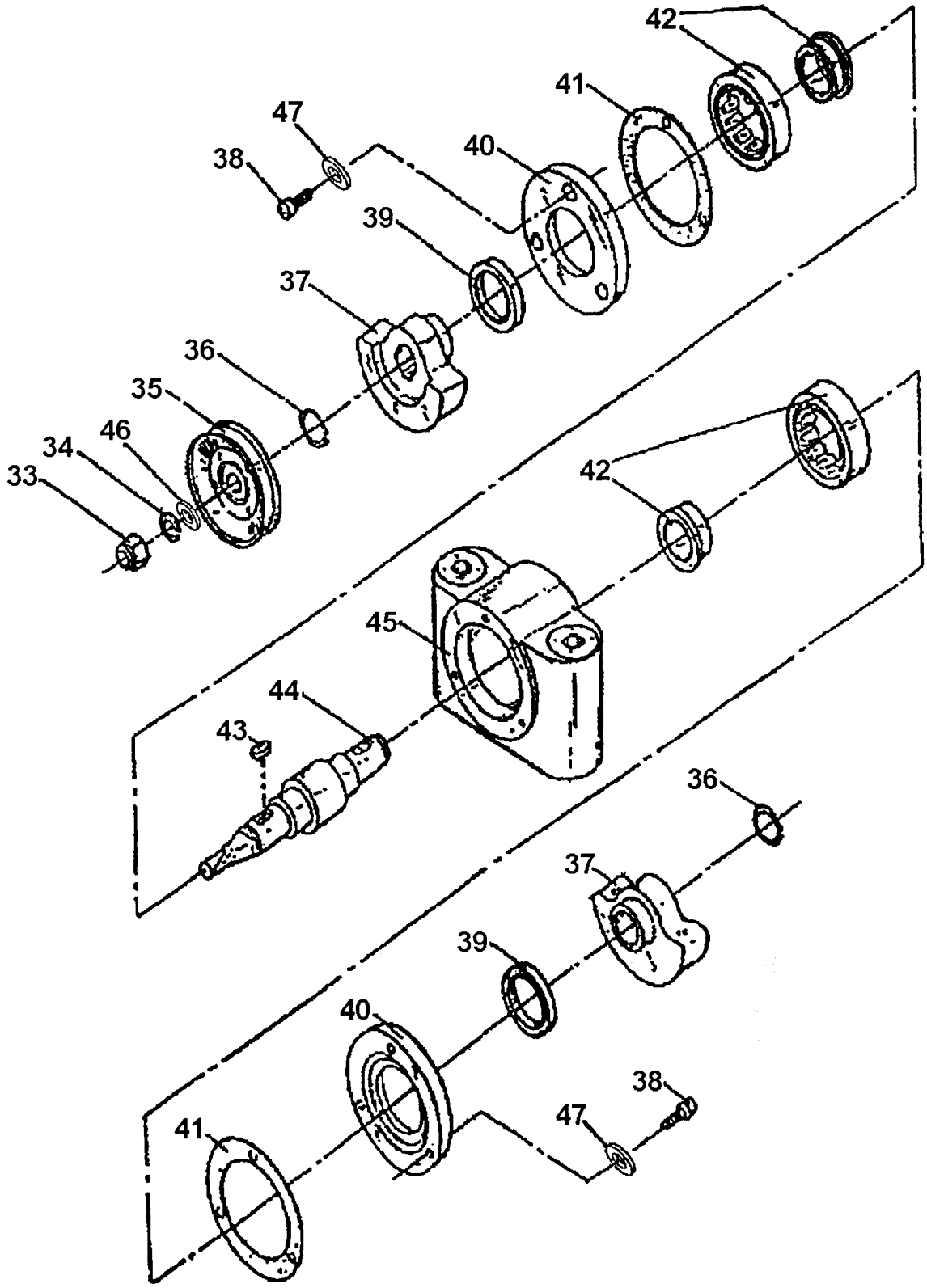

MS100 PARTS LIST 3

MS100 PARTS LIST 3

ITEM NO.	PART NO.	DESCRIPTION	QTY
33	0057808	BOLT M8X20 - GB5782	1
34	0093008	SPRING WASHER 8-GB93	1
35	2007001	PULLEY	1
36	0089424	RETAINING RING24-GB894	2
37	2007005	UNBALANCE WEIGHT	2
38	0070006	CAP SCREW M6 X 20-GB70.1	6
39	0098770	OIL SEAL-GB9877	2
40	2007004	BEARING COVER	2
41	2007008	BEARING COVER GASKET	2
42	0027606	BEARING42306-GB276	2
43	0010768	KEY A8 X 25-GB1076	2
44	2007002	SHAFT	1
45	2007003	PILLOW BLOCK	1
46	0097008	WASHER 8 - GB97.1	1
47	0097006	WASHER 6 - GB97.1	6

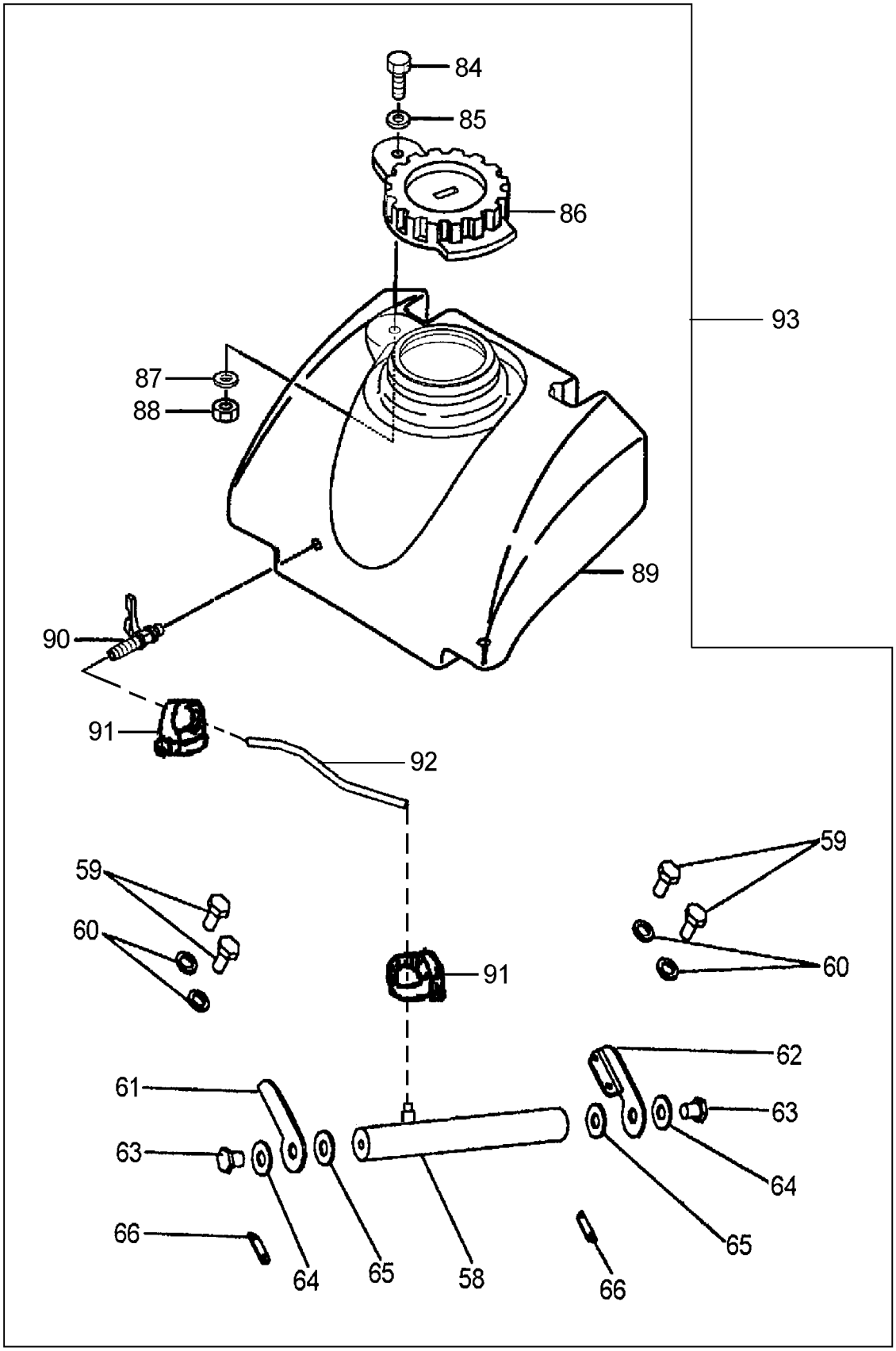

MS100 PARTS LIST 4

MS100 PARTS LIST 4

ITEM NO.	PART NO.	DESCRIPTION	QTY
58	A2008009-1	SPRING PIPE	1
59	0070008	BOLT M8X16-GB70	4
60	0093008	SPRING WASHER8-GB93	4
61	A2008010	PIPE HOLDER (L.)	1
62	A2008011	PIPE HOLDER (R.)	1
63	0057838	BOLT M8X16-GB5783	2
64	0093008	SPRING WASHER8-GB93	2
65	A2008012	SEAT PACKING	2
66	A2008013	RUBBER WASHER	2
67	0093008	SPRING WASHER 8-GB93	4
84	0081800	BOLT M10X30-GB818	1
85	0097010	WASHER 10-GB97.1	1
86	A2008005-1	CAP OF WATER TANK	1
87	0097010	WASHER 10-GB97.1	1
88	0088910	NUT M10-GB889	1
89	A2008006-1	WATER TANK	1
90	A2008007-1	COCK	1
91	A2008003-1	CLIP HOOP	1
92	A2008008	HOSE ∮10X100	1
93	2008014	WATER TANK ASSY. (OPTIONAL)	1

Distributed By

MASALTA ENGINEERING CO., LTD

Add: Weisi Road, Baohe Industrial Estate, Hefei, China
Tel: 86-551-4846600, 4846601 Fax: 86-551-4846616
E-mail: sales@masalta.com.cn, masalta@mail.hf.ah.cn,
Http://www.masalta.com.cn

Version: 01/08/05

ОФИЦИАЛЬНЫЙ ДИЛЕР В УКРАИНЕ:
storgom.ua

ГРАФИК РАБОТЫ:
Пн. – Пт.: с 8:30 по 18:30
Сб.: с 09:00 по 16:00
Вс.: с 10:00 по 16:00

КОНТАКТЫ:
+38 (044) 360-46-77
+38 (066) 77-395-77
+38 (097) 77-236-77
+38 (093) 360-46-77

Детальное описание товара: https://storgom.ua/product/vibroplita-masalta-ms100-4.html
Другие товары: https://storgom.ua/vibroplity.html